WIFI-Link™ Technologies Inc.
崴 海 尼 可 網 路 科 技 有 限 公 司
WEB:http://www.wifi-link.com.tw/ TEL:06-2523801 FAX:06-2526033

18dBi 指向天線防水盒 (5.8GHz ComTenna I ™)
WL-CT I -5775-18

APPLICATIONS AND FEATURES Applications:

- 5.7GHz-5.8GHz 18dBi ISM Band
- IEEE 802.11b/g/n Wireless LAN
- Directional application
- Bluetooth、Wi-Fi、RFID
- Public Wireless Hotspot
- Wireless Video Systems

Features :

- Superior Performance
- Made with weatherproof and corrosion resistant
- Good appearance design
- Installed for vertical or horizontal polarization
- Heavy Duty mounting
- RoHS Compliant

SPECIFICATIONS:

Electrical Specifications

Frequency Range	5725~5850 MHz
V.S.W.R	≦1.5:1
Return Loss	≧-14db
Antenna Type	PCB patch
Gain	18dBi
Polarization	Vertical or Horizontal
Maximum Power	50W
Vertical Beam-with	22°
Horizontal Beam-with	20°
Impedance	50Ω

Mechanical Specifications

Dimension	255x 255x65mm
Weight	1000g
Wind Survival	>150 MPH
Radome Material	ABS+ UV resistance
Clamps	U-bolt
Mounting	86-126mm
Operating Temperature	-40℃ to +80 ℃
RoHS Compliant	Yes
Connector	RP SMA MALE

All copyrights reserved All copyrights reserved All copyrights reserved All copyrights reserved

TESTING REPORT:

Return Loss

V.S.W.R

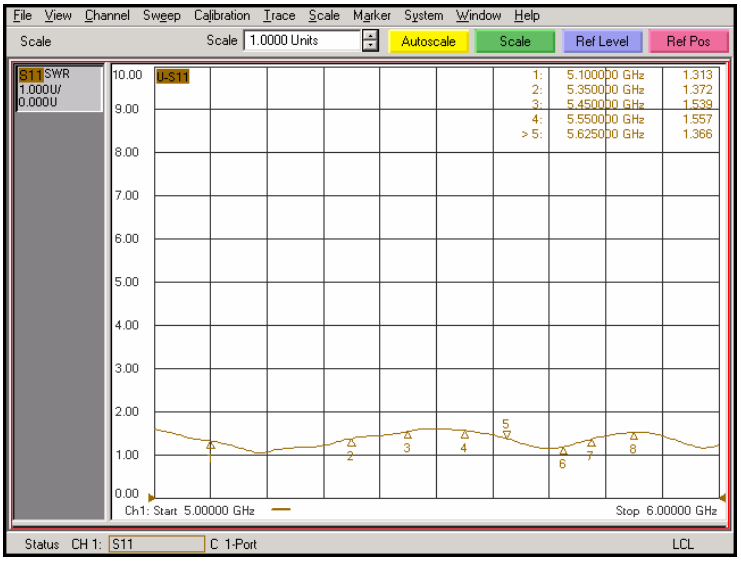

Antenna Vertical & Horzontal Pattern

Vertical

E Plane Pattern

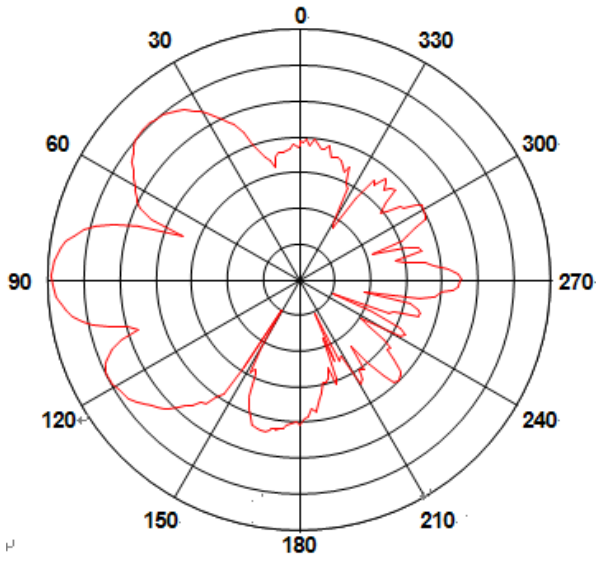

Horzontal

H Plane Pattern

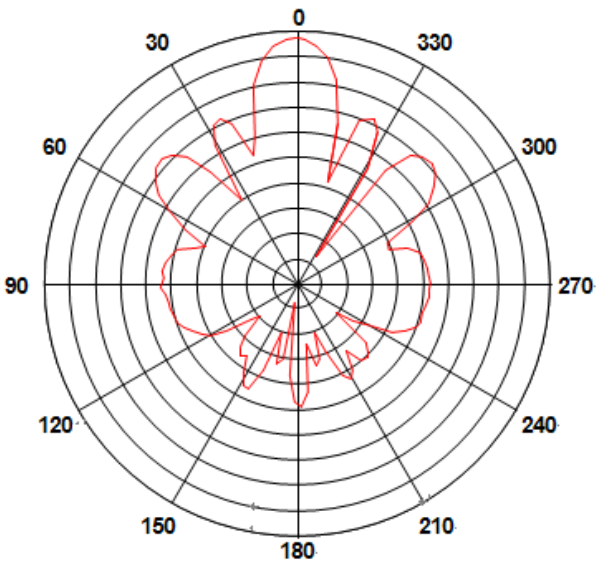

WIFI-Link™ Technologies Inc.
崴 海 尼 可 網 路 科 技 有 限 公 司
WEB:http://www.wifi-link.com.tw/ TEL:06-2523801 FAX:06-2526033

All creative content and details belonging to HYT's confidential, and the owner, without consent, Do not posted, theft, copied and sent to a third party.

WL-CT I -5775-18

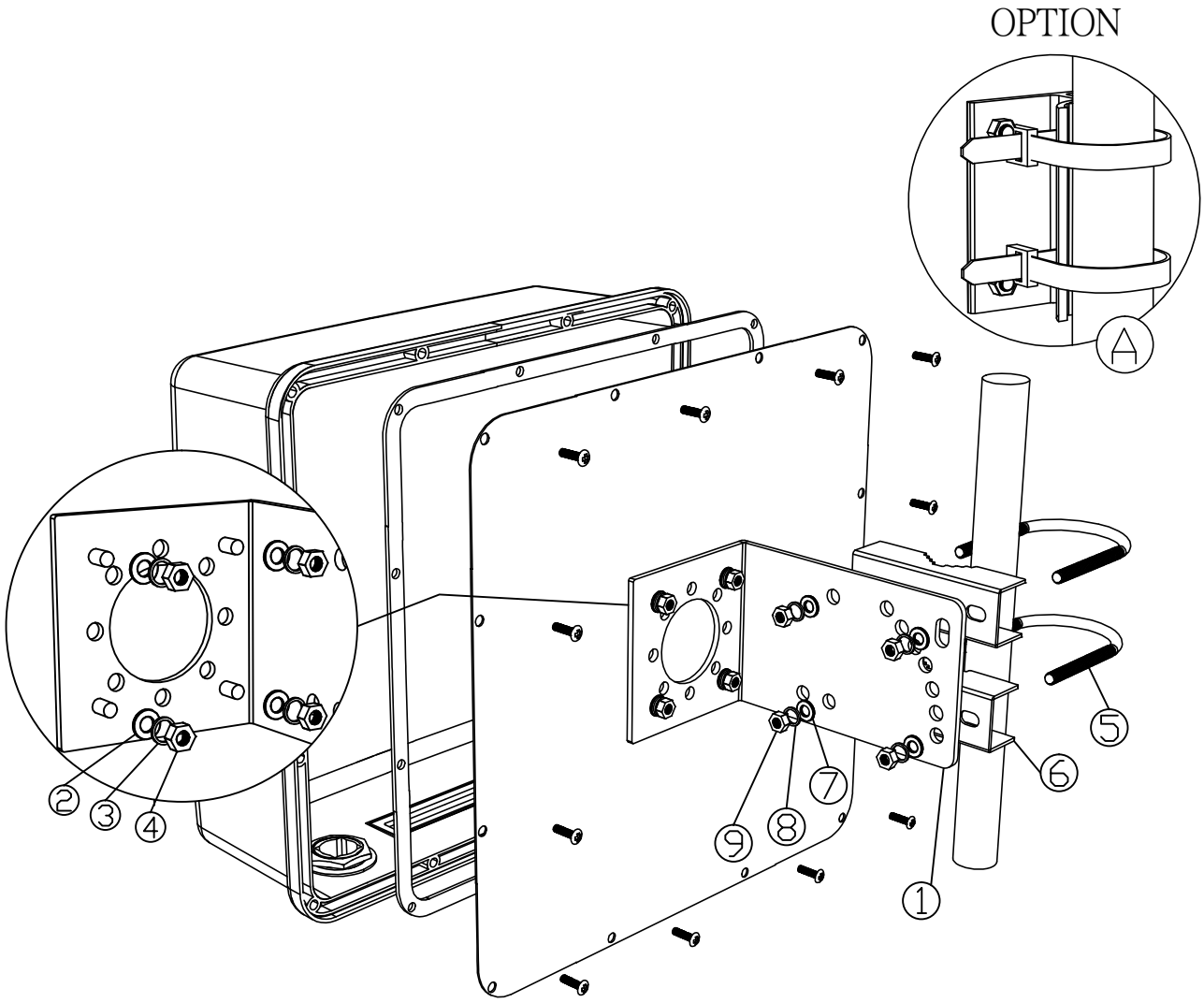

ACCESSORIES

① 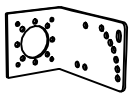 * 1 PC

② * 4 PC

③ * 4 PC

④ * 4 PC

⑤ * 2 PC

⑥ * 2 PC

⑦ * 4 PC

⑧ * 4 PC

⑨ * 4 PC

WIFI-Link™ Technologies Inc.
崴 海 尼 可 網 路 科 技 有 限 公 司
WEB:http://www.wifi-link.com.tw/ TEL:06-2523801 FAX:06-2526033