REV	DATE	DESCRIPTION	DRAWN

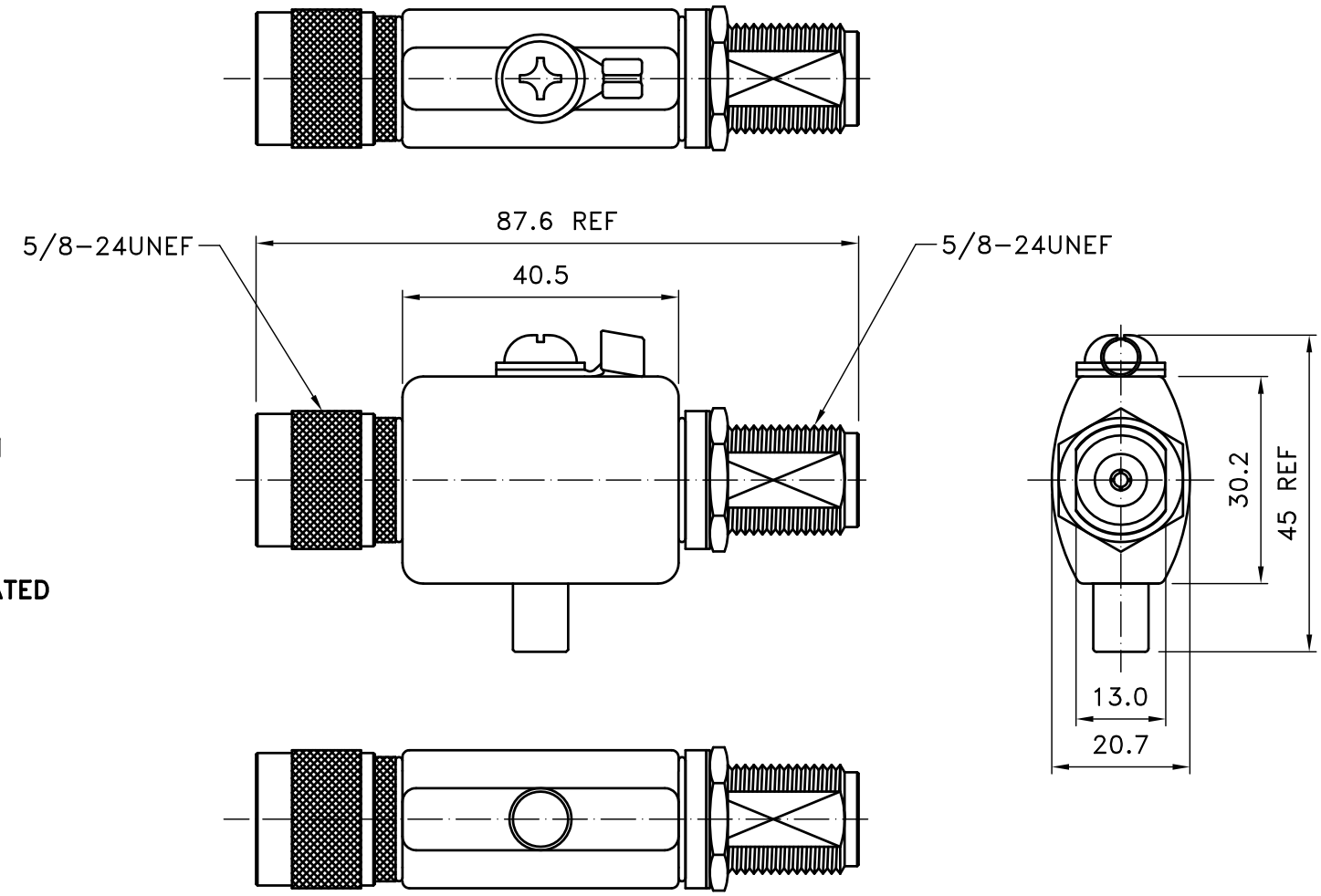

SPECIFICATIONS:

*BODY:ALUMINUM(6061)/BLACK MATT FINISH

*CONNECTOR:

N MALE/BRASS/NICKEL PLATED

N FEMALE BULKHEAD/BRASS/NICKEL PLATED

CONTACT/BRASS/GOLD PLATED

INSULATOR/TEFLON

*FREQUENCY RANGE:3GHz

*V.S.W.R:a.1GHz~2GHz LESS THAN 1.2

b.2GHz~3GHz LESS THAN 1.5

*INSERTION LOSS:LESS THAN 0.2dB

*DC BREAKDOWN VOLTAGE:DC90V±20%

*TOLERANCE OF DCBV: ±15%

*IMPULSE BREAKDOWN VOLTAGE@1KV/us: ≤700V 5KV/MAX

*AC DISCHARGE CURRENT@50Hz:10A

*Surge Discharge Current:

100A(10/1000μs,300times with 3mins interval)

10kA (8/20μs,10times with 3mins interval)

*INSULATION RESISTANCE: ≥10000Mohm

*ELECTRODE CAPACITANCE@1MHz: ≤1.5

NOTE	DIMENSION
1.STRIP ALL BURRS. 2.ALL DIMENSIONS ARE AFTER PLATING. 3.DIAMETERS ON COMMON CENTERS. TO BE CONCENTRIC WITHIN 0.1 T.I.R 4.CHAMFER 1ST & LAST THREADS 45°. 5.BREAK ALL CONNERS & EDGES CO.15 MAX.	UNLESS OTHERWISE NOTED TOLERANCES X=±0.3 0.X=±0.2 0.XX=±0.1

WIFI-Link™ 台灣崴海尼可

TITLE LP N MALE TO N FEMAEL BULKHEAD 2.4GHz	
DRAWING NO. WL-LA-NP-NJBKD	
APPROVED	DRAWN DATE 01/21/11
CHECKED	SCALE 1:1
DRAWN ALICE	UNIT mm